metalform
METAL FORM MANUFACTURING CO., INC
5960 WEST WASHINGTON STREET
PHOENIX, ARIZONA 85043
TELEPHONE: 602-233-1211 FAX: 602-233-2033
WEBSITE ADDRESS: WWW.MFMCA.COM

# Model MFL Series Fabricated Security Louvers

**Steel**

## Specifications

| | |
|---|---|
| **Frame:** | 18ga. galvanized steel channel frame. |
| **Blades:** | 18ga. galvanized steel. |
| **Security Bar:** | 1/4” x 2” C.R. steel bar internally welded 24” O.C.. |
| **Screen:** | 1/2” x 1/2” x 19ga. galvanized steel. |
| **Finish:** | Standard mill. |
| **Minimum size:** | 12”w x 12”h. |
| **Maximum size:** | 72”w x 96”h. Multiple section - unlimited size. |

## Options

-Flanged frame.
-Architectual mullions.
-Sill extension.
-Sleeves.
-Sub frame (requires flanged louver).
-Screens - Many variations of screens are available , consult factory.
-Finishes - Many types of finishes are available, consult factory.
-Other options available, consult factory.

## Notes

1. Width x height are nominal opening dimensions. Unless specified otherwise, units will be constructed 1/4” undersize.
2. Standard models available are MFL-24S, MFL-24DBS, MFL-30S, MFL-30DBS.
2. Metal Form reserves the right to improve design or change specifications at any time.

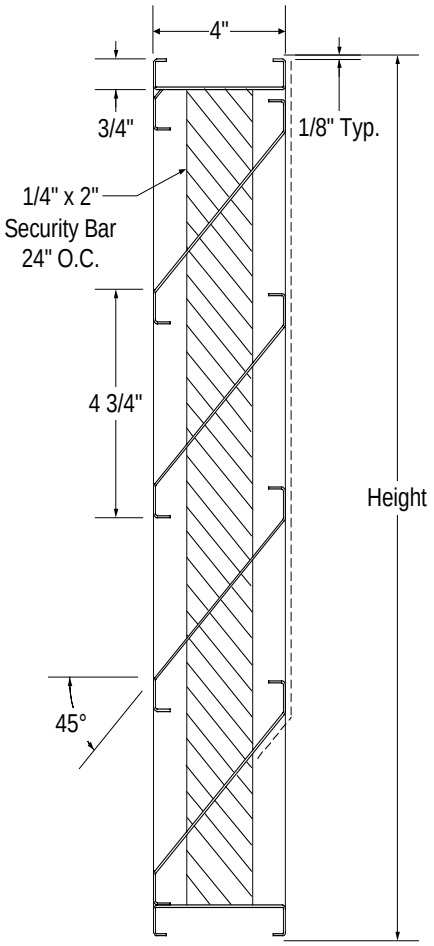


Section View

**Model MFL-24S shown.**

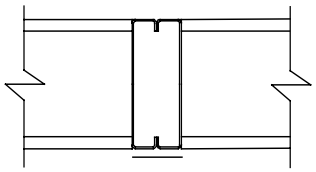

Mullion Detail

Optional Flanged Frame

| Tag | Qty. | Width | Height | No. of Panels (W x H) | Options | Finishes/Specify | Remarks |
|---|---|---|---|---|---|---|---|
| | | | | | | | |
| | | | | | | | |
| | | | | | | | |
| | | | | | | | |
| | | | | | | | |
| | | | | | | | |
| | | | | | | | |
| | | | | | | | |
| | | | | | | | |
| | | | | | | | |

**Project:** _____
**Architect:** _____
**Engineer:** _____
**Contractor:** _____

©1998 Metal Form Manufacturing Co., Inc.
Form No. L-24S98